Dimensions
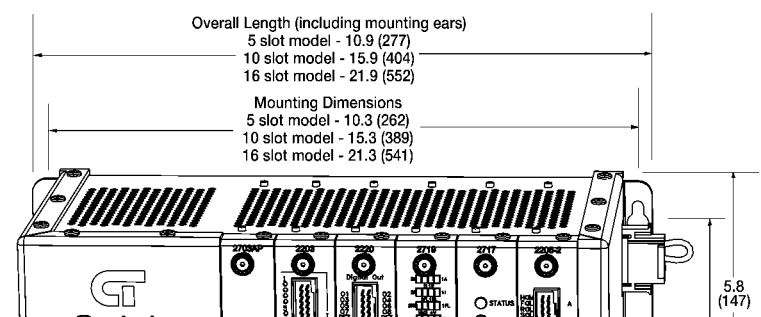
Dimensions are in inches (mm).